fluid™

fixtures for life.

Citi Switch Shower & Hand Shower Trim Kit

F241015T



Specifications:

- **Stainless Steel Construction**
- **Rainshower Head** provides a soft, gentle water flow
- **3-Function Hand Shower**
- **Adjustable Slide Bar** allows you to change hand shower height
- **16" Swivelling Switch Shower Arm** for adjustable positioning
- **Reversible Hose Elbow** installs left or right
- **Water Inlet** is located at the top installation post
- **Built in Check Valve** prevents backflow
- **Requires the fluid F1001B or F1021B** pressure balancing valve (sold separately and available with shut off, PEX and PEX-W)

Components:

F1001T	Sleeve Tube and Cap
FP6001035-1PB	Round Cover Plate
FP6024041	Blade Handle
FP933000	26" Main Slide Bar (Round Trim)
FP900216	16" Shower Arm with 6" Riser
FP40120	3-Function Round Hand Shower *
FP6002150	8" Round Rain Showerhead
FP6001006	60" Shower Hose *

Features:

Requires Non-Diverting F1001B or F1021B valve

Integral Stops

Bubble Level

Speed Connect (Slide Bar)

ADA

* **Matte Black Specific Components**
FP6001007MB Hose | FP40130MB Hand Shower

Polished Chrome (CP), Brushed Nickel (BN), and Matte Black (MB)

fluid by **Sustainable Solutions**
Email: help@sustainablesolutions.com
Toll Free: 1 800 460 7019

WEBSITE

Technical Drawing

F241015T

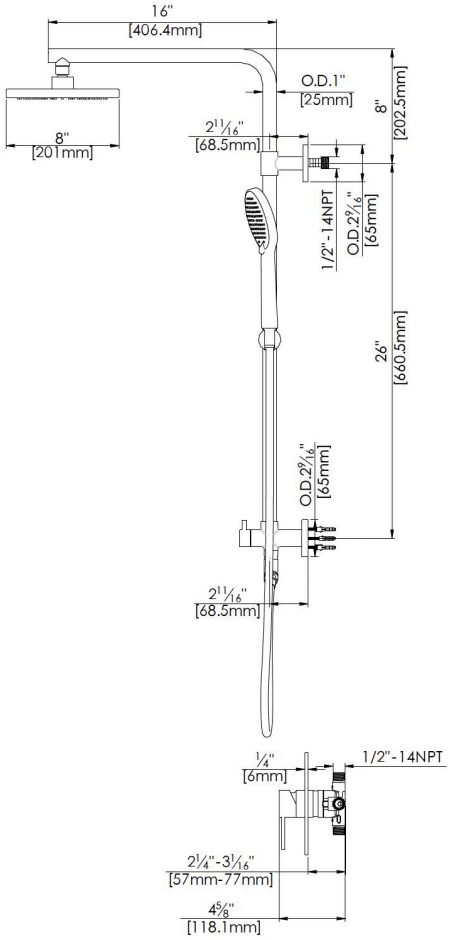

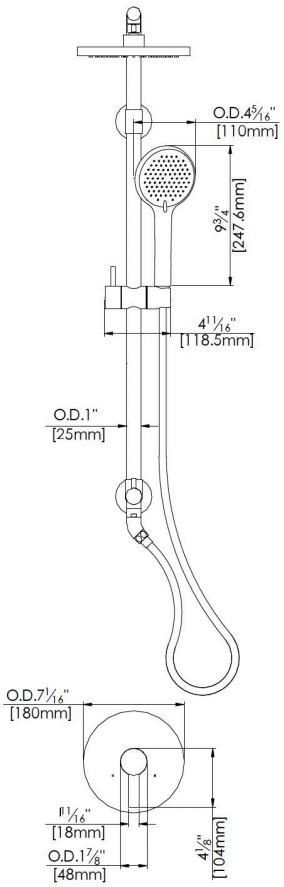

Warranty

Limited Lifetime Faucet Warranty against material and manufacturing defects for residential use.

2 Year Limited Warranty on all industrial, commercial and business applications.

Codes and Standards:

ANSI/ASME A112.18.1

CSA B125.1

IAPMO / cUPC Listed

EPA Watersense Listed

Flow Rate:

Showerhead 1.8 gpm @ 60 psig

Hand Shower 1.8 gpm @ 60 psig

Low Flow Alternative: Hand Shower @ 1.5 gpm: **F241015T-15**