fluid Innovative fixtures for life

SPECIFICATIONS

Customer Service: 1-800-460-7019
www.fluidfaucets.com

Sustainable Solutions

fluid Quad Trim Kit for In-Wall Valve
Model: FP6016132-1PB

Includes:

F1001T	Sleeve Tube and Cap
FP6001033	Square Cover Plate
FP6016041	Quad Handle

Specifications
- Metal construction for durability and reliability
- Square cover plate
- Quad handle
- Pressure balancing volume control
- Requires pressure balancing valve F1001B or F1001B-PEX or F1001B-PEX-W
- Valve and trim packages are sold separately

Finish
- CP (Polished Chrome)
- BN (PVD Brushed Nickel)
- MB (Matte Black)

Codes and Standards
- ANSI/ASME A112.18.1
- CSA B125.1
- IAPMO / cUPC

Warranty
- Limited Lifetime Faucet Warranty against material and manufacturing defects for residential use.
- 2 Year Limited Warranty on all industrial, commercial and business applications.

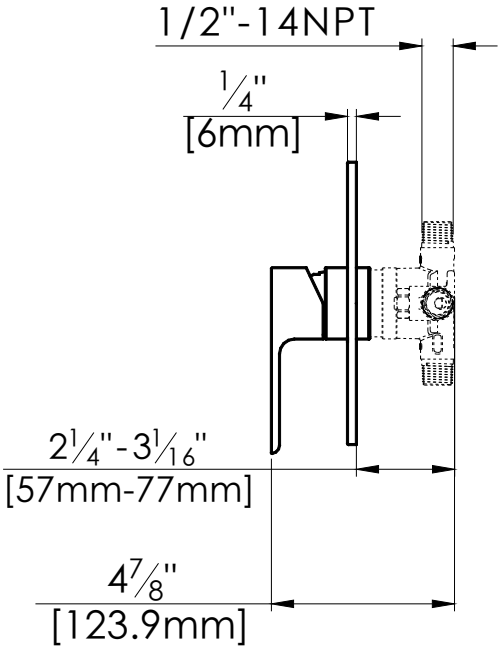

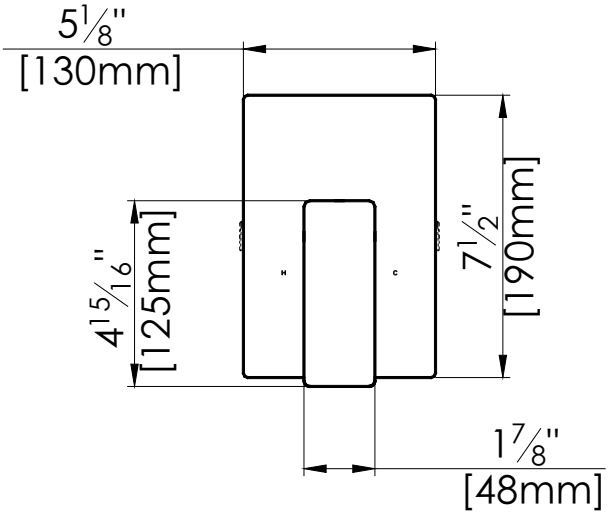

Sustainable Solutions
8395 Riverbend Court, Burnaby, BC
V3N 5E7, Canada