fluid Innovative fixtures for life

SPECIFICATIONS

Customer Service: 1-800-460-7019
www.fluidfaucets.com

SSi SUSTAINABLE SOLUTIONS INTERNATIONAL

fluid Sublime Series
Single Lever Lavatory Faucet
Model: F13001
Model: F13002 (for vessel sink)

Specifications

- Heavy brass construction for durability and reliability
- Kerox ceramic cartridge ensures life long trouble free service
- Single lever handle operation allows both volume and temperature control
- Max-temperature limit stop for added safety.
- SSi Eco-Care pivot aerator 1.2 gpm (4.6 lpm) at 60 psi
- Extra long flexible connection for easy installation
- Single-hole mounting with a supplied wrench tool
- 1-1/2" faucet hole size for drilling recommended
- Includes waste pop-up drain

Finish

- CP (Polished Chrome)
- PVD-BN (PVD Brushed Nickel)

Codes and Standards

- ANSI/ASME A112.18.1
- CSA B125.1
- NSF61-9
- ADA
- IAPMO / cUPC Listed
- EPA Watersense Listed
- AB1953 California Lead Plumbing Law Certified

Warranty

- Limited Lifetime Faucet Warranty against material and manufacturing defects for residential use.
- 2 Year Limited Warranty on all industrial, commercial and business applications.

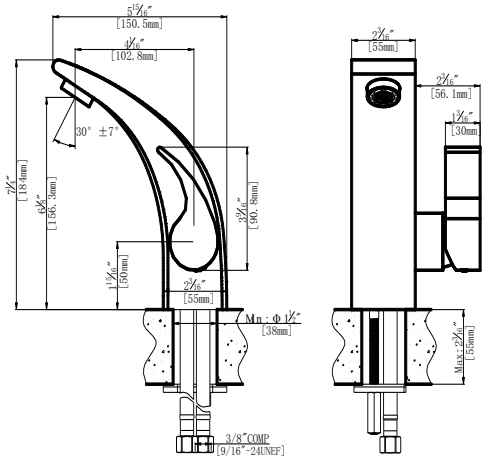

Model: F13001

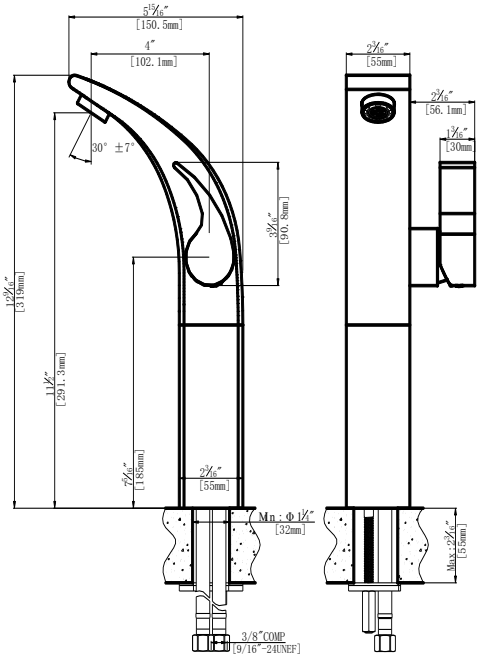

Model: F13002

SSI Sustainable Solutions International
8395 Riverbend Court, Burnaby, BC
V3N 5E7, Canada