fluid Innovative fixtures for life

SPECIFICATIONS

Customer Service: 1-800-460-7019
www.fluidfaucets.com

Sustainable Solutions

fluid Thermostatic Valve with 3 Way Diverter Model: F5003B

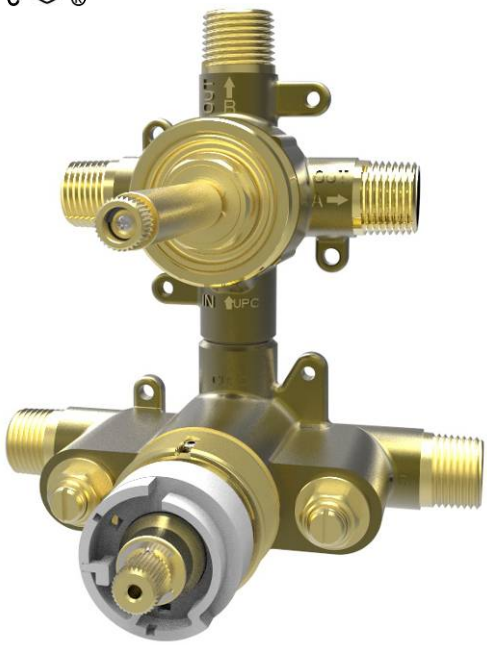

Specifications

- Heavy forged brass construction for durability and reliability
- German made fluehs brass thermostatic cartridge ensures anti-scald operation, temperature control and life-long trouble-free service
- German made fluehs brass ceramic 3-Way diverter cartridge allows volume control
- Temperature button stops the handle rotation at 100°F/38°C for anti-scald protection. If water above 100°F/38°C is desired, press the button and turn the handle counter clockwise.
- Max-temperature limit stop for added safety
- Integral stop valves for easy maintenance
- Dual inlet and outlet ports – 1/2" CxC soldering & 1/2" NPT thread
- PEX inlet ports available F5003B-PEX
- Adjustable installation depth from 2-11/16"(68mm) to 3-5/16" (84mm)
- Mud guard is provided to help protect valve from dust and debris during installation
- Bubble level is attached to mud guard for an easy and level installation
- A wide selection of trims are sold separately

Flow Rate

- 5.5 gpm @ 60 psig

Finish

- Brass

Codes and Standards

- ANSI/ASME A112.18.1
- CSA B125.1
- IAPMO / cUPC Listed

Warranty

- Limited Lifetime Faucet Warranty against material and manufacturing defects for residential use.
- 2 Year Limited Warranty on all industrial, commercial and business applications.

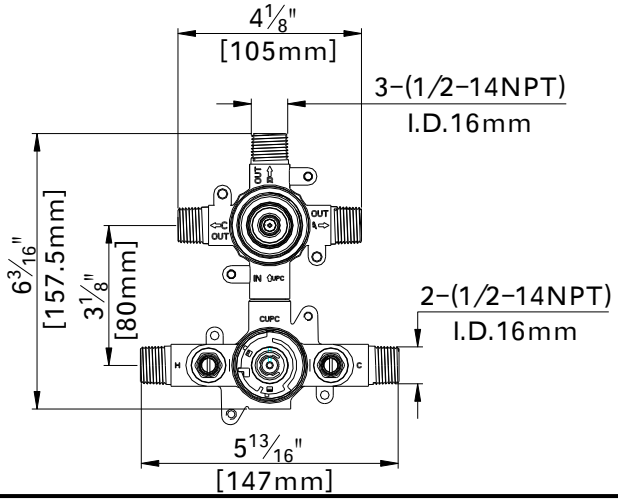

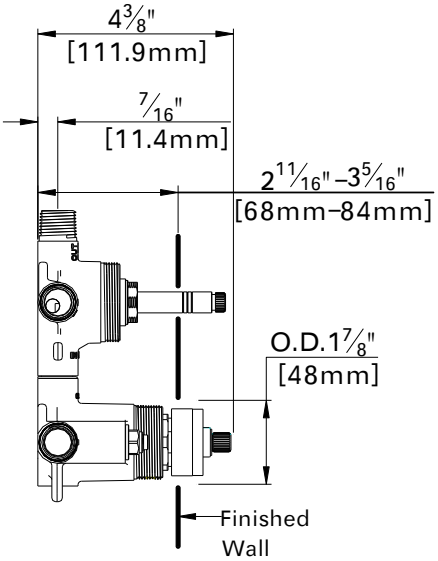

Sustainable Solutions
8395 Riverbend Court, Burnaby, BC
V3N 5E7, Canada