fluid Innovative fixtures for life

SPECIFICATIONS

Customer Service: 1-800-460-7019
www.fluidfaucets.com

SSi SUSTAINABLE SOLUTIONS INTERNATIONAL

fluid Viola Series Handheld Shower with Slide Bar Trim Package Model: F1254T

Specifications

- Brass construction for durability and reliability
- Pressure balancing volume control ceramic cartridge ensures anti-scald operation with a life long trouble free service
- Single lever handle operation allows temperature and volume control
- SSi "Smart Connector" slip fitting for wall outlet
- 5-function ABS showerhead with 8" long shower arm
- Brass round handheld shower wand on slide bar
- Requires valve with diverter F1000B

Flow Rate

- Showerhead 1.8 gpm @ 60 psig
- Handheld shower wand 1.8 gpm @ 60 psig

Finish

- CP (Polished Chrome)
- PVD-BN (PVD Brushed Nickel)

Codes and Standards

- ANSI/ASME A112.18.1
- CSA B125.1
- ADA
- IAPMO / cUPC Listed

Warranty

- Limited Lifetime Faucet Warranty against material and manufacturing defects for residential use.
- 2 Year Limited Warranty on all industrial, commercial and business applications.

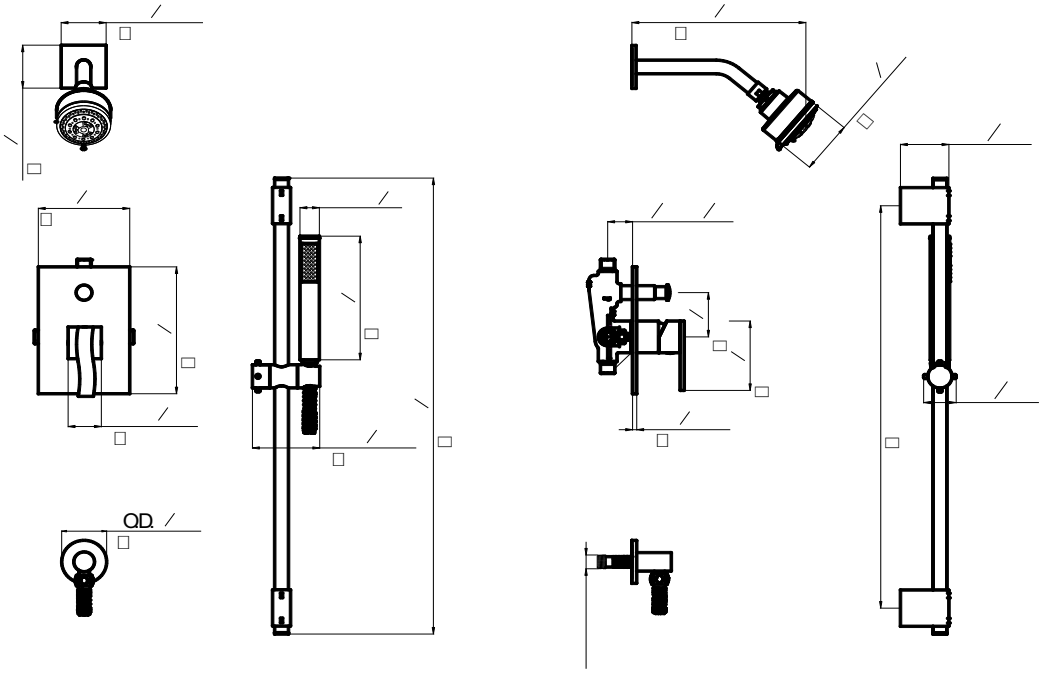

SSI Sustainable Solutions International
8395 Riverbend Court, Burnaby, BC
V3N 5E7, Canada