fluid™

SSi™
SUSTAINABLE
SOLUTIONS
INTERNATIONAL

Innovative fixtures for life™

Thermostatic

Valves & Trims

Rough-in Valves

Only the highest quality valves are used in the manufacturing of fluid faucets.

German-made Fluhs cartridges are featured in our volume controls and diverters and our thermostatic valves use internationally-renowned France-made Vernet cartridges.

Fluid uses a unique quick-connect elbow supply with shutoff for easy and dependable installation.

One-piece valve body casting is utilized to eliminate in-wall connections. Rough-in features a built-in level to ensure trims stay straight.

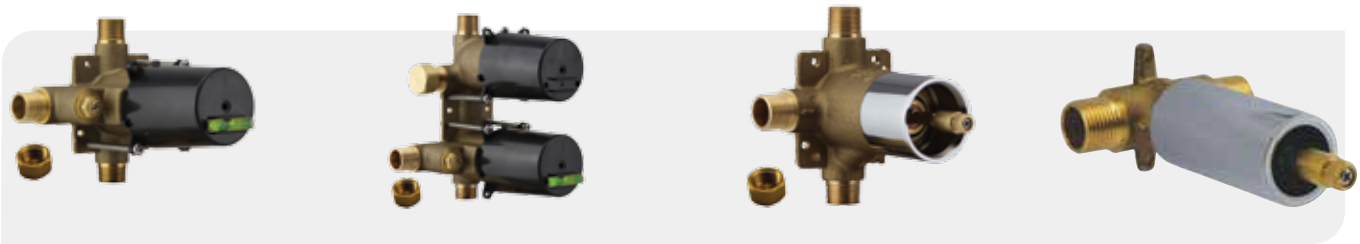

F5100B
CP $259 BN $309
½" Thermostatic Rough-in

Must be used with separate volume control

Flow rate 12.5GPM @ 60PSI

F5000B
CP $349 BN $399
½" Thermostatic Rough-in with Volume Control

Built-in volume control for top outlet

Flow rate 12.5GPM @ 60PSI

F5610B
CP $239 BN $269
3-way Diverter Valve with Sharing Options

F5600B
CP $239 BN $269
3-way Diverter Valve with Shutoff

F5500B
CP $109 BN $129
Volume Control Shutoff Valve

Trims

F5100T
CP $179 BN $199
Round Thermostatic Trim

Requires rough-in F5100B

F5101T
CP $229 BN $259
Square Thermostatic Trim

Requires rough-in F5100B

F5000T
CP $299 BN $349
Round Thermostatic Trim

Requires rough-in F5000B

F5001T
CP $399 BN $469
Square Thermostatic Trim

Requires rough-in F5000B

F5700
CP $139 BN $169
Round Wall Outlet
with Volume Control

Requires drop ear 90 in wall

F5701
CP $159 BN $199
Square Wall Outlet
with Volume Control

Requires drop ear 90 in wall

F5500T
CP $70 BN $80
Volume Control Trim

Requires shutoff valve F5500B

F5501T
CP $80 BN $90
Volume Control Trim

Requires shutoff valve F5500B

F5600T
CP $69 BN $89
Round 3-way Diverter Trim

Requires 3-way diverter valve
F5610B or F5600B

F5601T
CP $139 BN $159
Square 3-way Diverter Trim

Requires 3-way diverter valve
F5610B or F5600B

Wall Shower Kits

FT1SQ WALL
CP $899 BN $1079
Square Thermostatic Kit

Includes:

F5000B	Thermostatic Valve with Flow Control
F5001T	Square Trim Set
FP6001050	Rain Shower Head
FP6012008	Shower Arm

FT2SQ WALL
CP $1299 BN $1499
Square Thermostatic Kit with Handheld

Includes:

F5000B	Thermostatic Valve with Flow Control
F5001T	Square Trim Set
F5701	Wall Outlet with Volume Control
FP6001050	Rain Shower Head
FP6012008	Shower Arm
FP40200	Hose for Handheld
FP6002048	Shower Wand
FA106	Slide Bar

FT2SQ WALL 5
CP $1299 BN $1499
Square Thermostatic Kit with
5-Function Handheld

Includes:

F5000B	Thermostatic Valve with Flow Control
F5001T	Square Trim Set
F5701	Wall Outlet with Volume Control
FP6001050	Rain Shower Head
FP6012008	Shower Arm
FP40200	Hose for Handheld
FP40100	5-Function Shower Wand
FA106	Slide Bar

FT1RD WALL
CP $799 BN $949
Round thermostatic Kit

Includes:

F5000B	Thermostatic Valve with Flow Control
F5000T	Round Trim Set
FP6002050	Rain Shower Head
FP6013008	Shower Arm

FT2RD WALL
CP $1099 BN $1299
Round Thermostatic Kit with Handheld

Includes:

F5000B	Thermostatic Valve with Flow Control
F5000T	Round Trim Set
F5700	Wall Outlet with Volume Control
FP6002050	Rain Shower Head
FP6013008	Shower Arm
FP40200	Hose for Handheld
FP6001048	Shower Wand
FA101	Slide Bar

FT2RD WALL 5
CP $1099 BN $1299
Round Thermostatic Kit with
5-Function Handheld

Includes:

F5000B	Thermostatic Valve with Flow Control
F5000T	Round Trim Set
F5700	Wall Outlet with Volume Control
FP6002050	Rain Shower Head
FP6013008	Shower Arm
FP40200	Hose for Handheld
FP40100	5-Function Shower Wand
FA101	Slide Bar

Ceiling Shower Kits

FT1SQ CEIL
CP $899 BN $1079
Square Thermostatic Kit

Includes:

F5000B	Thermostatic Valve with Flow Control
F5001T	Square Trim Set
FP6001050	Rain Shower Head
FP6021008	12" Ceiling Shower Arm

FT2SQ CEIL
CP $1299 BN $1499
Square Thermostatic Kit with Handheld

Includes:

F5000B	Thermostatic Valve with Flow Control
F5001T	Square Trim Set
F5701	Wall Outlet with Volume Control
FP6001050	Rain Shower Head
FP6021008	12" Ceiling Shower Arm
FP40200	Hose for Handheld
FP6002048	Shower Wand
FA106	Slide Bar

FT2SQ CEIL 5
CP $1299 BN $1499
Square Thermostatic Kit with 5-Function Handheld

Includes:

F5000B	Thermostatic Valve with Flow Control
F5001T	Square Trim Set
F5701	Wall Outlet with Volume Control
FP6001050	Rain Shower Head
FP6021008	12" Ceiling Shower Arm
FP40200	Hose for Handheld
FP40100	5-Function Shower Wand
FA106	Slide Bar

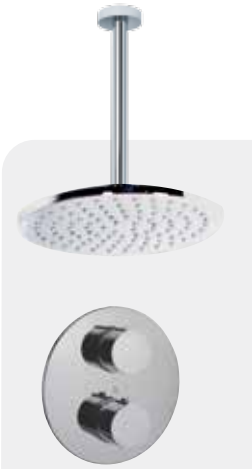

FT1RD CEIL
CP $799 BN $949
Round Thermostatic Kit

Includes:

F5000B	Thermostatic Valve with Flow Control
F5000T	Round Trim Set
FP6002050	Rain Shower Head
FP6019008	12" Ceiling Shower Arm

FT2RD CEIL
CP $1099 BN $1299
Round Thermostatic Kit with Handheld

Includes:

F5000B	Thermostatic Valve with Flow Control
F5000T	Round Trim Set
F5700	Wall Outlet with Volume Control
FP6002050	Rain Shower Head
FP6019008	12" Ceiling Shower Arm
FP40200	Hose for Handheld
FP6001048	Shower Wand
FA101	Slide Bar

FT2RD CEIL 5
CP $1099 BN $1299
Round Thermostatic Kit with 5-Function Handheld

Includes:

F5000B	Thermostatic Valve with Flow Control
F5000T	Round Trim Set
F5700	Wall Outlet with Volume Control
FP6002050	Rain Shower Head
FP6019008	12" Ceiling Shower Arm
FP40200	Hose for Handheld
FP6001048	5-Function Shower Wand
FA101	Slide Bar

Options

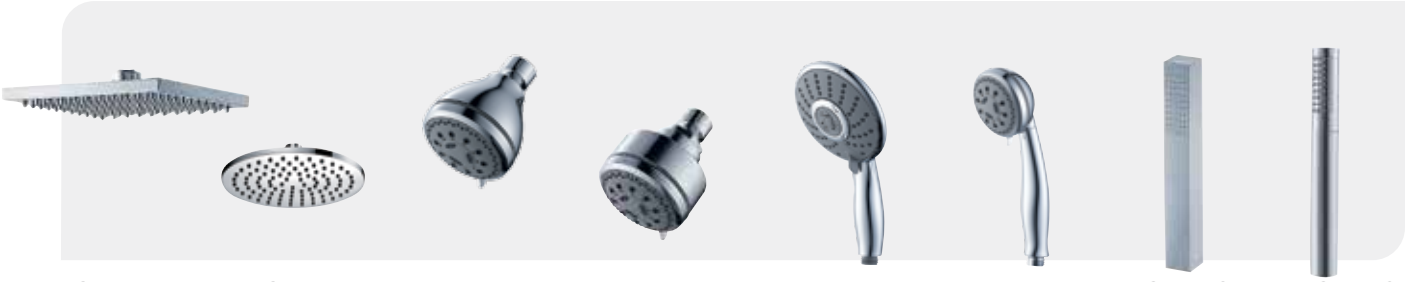

FP6001050
CP $199 BN $249
8" Rain Shower Head

FP6002050
CP $199 BN $249
8" Rain Shower Head

FP20110
CP $23 BN $29
5-Function Shower Head

FP20100
CP $39 BN $49
5-Function Shower Head

FP40110
CP $79 BN $98
3-Function Shower Wand

FP40100
CP $59 BN $74
5-Function Shower Wand

FP6002048
CP $59 BN $74
Shower Wand

FP6001048
CP $59 BN $74
Shower Wand

Shower Arms

FP6016008
CP $21 BN $26
8" Shower Arm

FP6017008
CP $21 BN $26
8" Shower Arm

FP6013008
CP $85 BN $106
Shower Arm

FP6012008
CP $95 BN $119
Shower Arm

FP6019008
CP $49 BN $59
12" Ceiling Shower Arm

FP6021008
CP $49 BN $59
12" Ceiling Shower Arm

FP6018008
CP $35 BN $42
6" Ceiling Shower Arm

FP6020008
CP $35 BN $42
6" Ceiling Shower Arm

Tub Fillers

FP6030034
CP $170 BN $213
Tub Spout

FP6058034
CP $58 BN $73
Tub Filler

FP6057034
CP $69 BN $87
Tub Filler

Handheld Accessories

FP6002047
CP $76 BN $95
Handheld Shower Wall Outlet

FP6001047
CP $89 BN $110
Handheld Shower Wall Outlet

FP40300
CP $34 BN $42
Tilting Handheld Shower Holder

FP6001010
CP $29 BN $36
Fixed Handheld Shower Holder

FP40200
CP $34 BN $43
Hose for Handheld Shower Wand

Slide Rails

FA100
CP $89
BN $111
Slide Rail

FA101
CP $89
BN $111
Slide Rail

FA102
CP $89
BN $111
Slide Rail

FA103
CP $89
Slide Rail

FA105
CP $129
BN $160
Plated Brass Slide Rail

FA106
CP $149
BN $186
Plated Brass Slide Rail

CP = chrome finish BN = brushed nickel finish

Technical Drawings

Fixed Shower and Handheld Shower on Slide Bar

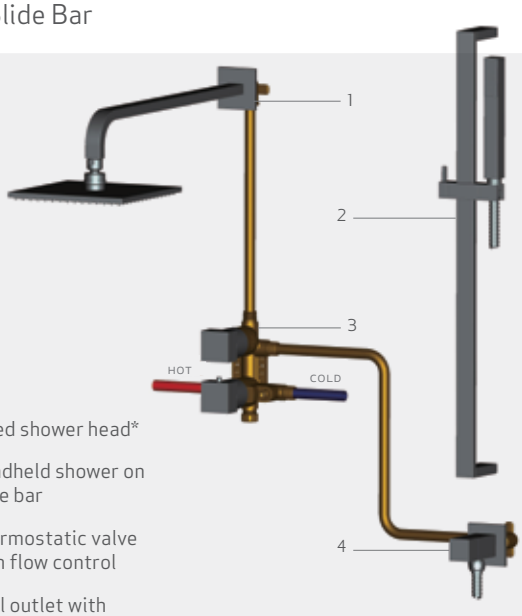

1. Fixed shower head*
2. Handheld shower on slide bar
3. Thermostatic valve with flow control
4. Wall outlet with volume control*

Fixed Shower, Tub Spout and Handheld Shower on Slide Bar

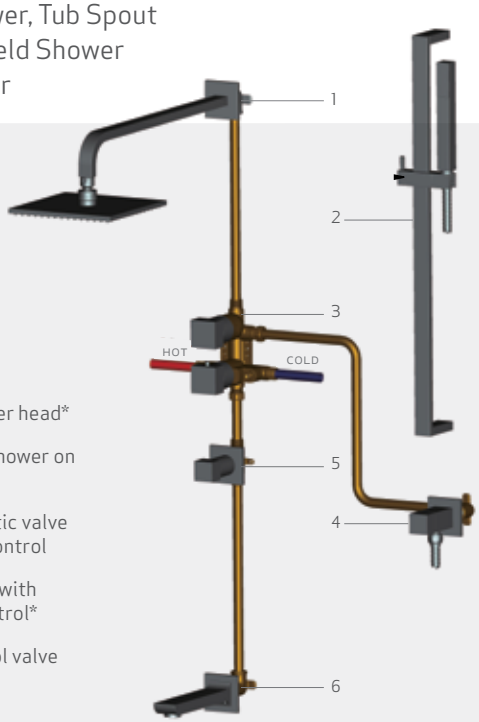

1. Fixed shower head*
2. Handheld shower on slide bar
3. Thermostatic valve with flow control
4. Wall outlet with volume control*
5. Flow control valve
6. Tub spout*

Fixed Shower, Tub Spout and Handheld Shower on Slide Bar

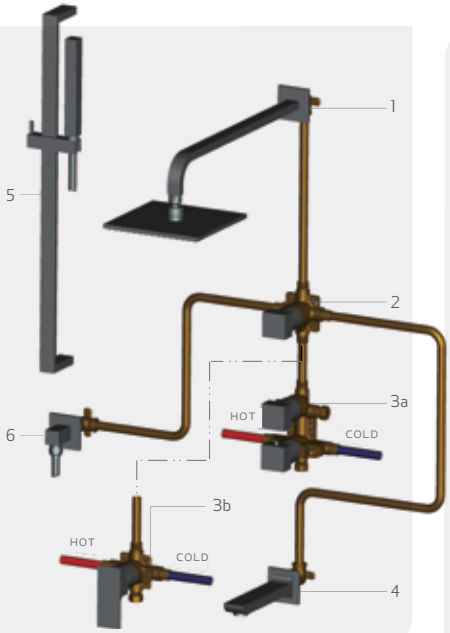

1. Fixed shower head*
2. Three-way diverter valve with sharing
3a. Thermostatic valve with volume control F5000B†
3b. Pressure balancing valve F1001B†
4. Tub spout*
5. Handheld shower on slide bar
6. Wall outlet drop elbow*

Fixed Shower, Tub Spout and Handheld Shower on Slide Bar

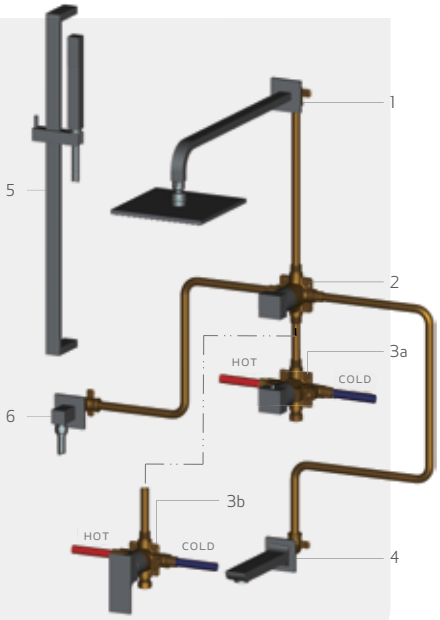

1. Fixed shower head*
2. 3-way diverter with shut-off
3a. Thermostatic valve F5000B‡
3b. Pressure balancing valve F1001B‡
4. Tub spout*
5. Handheld shower on slide bar
6. Wall outlet drop elbow*

†Note: Either thermostatic valve with volume control F5000B or pressure balancing valve F1001B can be used as a water source control valve in this layout

‡Note: Either thermostatic valve F5001B or pressure balancing valve F1001B can be used as a water source control valve in this layout

*Requires drop ear 90 for rough-in

fluid™

SSi™
SUSTAINABLE
SOLUTIONS
INTERNATIONAL

fluid™ offers a wide variety of faucets and accessories that bring to mind the philosophy of *innovative fixtures for life.*™

web fluidfaucets.com tel 1 800 460 7019 fax 604 430 5050

USA
3325 S. Garfield Ave.
City of Commerce, CA 90040

Canada
8395 Riverbend Court
Burnaby, BC Canada V3N 5E7

IAPMO LISTED

All faucets meet or exceed the following standards:
ASME A112.18.1 / CSA B125.1 / NSF61-9
These products have been tested and certified by IAPMO.

EPA WaterSense PARTNER

All Fluid™ faucets are WaterSense certified

ION BRANDING + DESIGN