Reflections 305 Elongated

1.6/0.8 GPF (6/3 l) Water Saving, Dual Flush High Efficiency Toilet (HET),
Two Piece Ultra Low Flush (ULF) Vitreous China Washdown Toilet

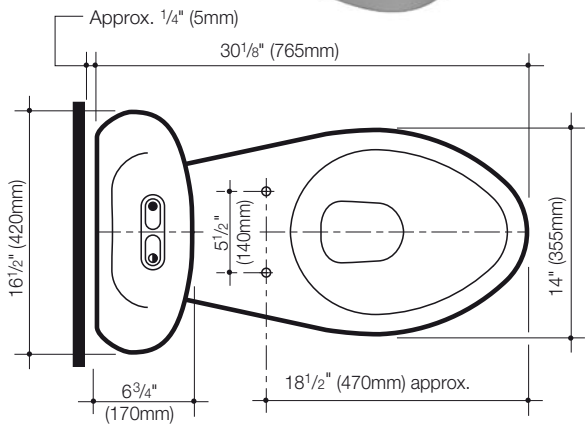

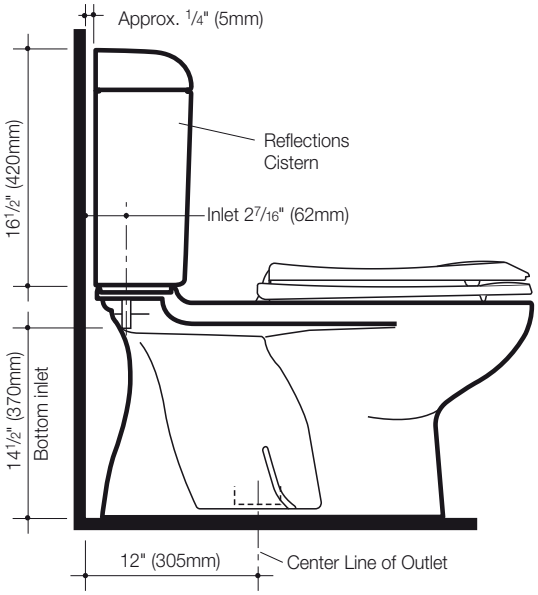

Reflections 305 Elongated
- 1.6/0.8 gpf (gallons per flush). 6/3 liters.
- Vitreous china
- Open flushing rim
- S Trap washdown
- Matching white low profile half/full flush push buttons
- Water control valve – super quiet water control assembly
- Shipping Weight:

Engineering Specification:

☐ **Reflections 305 Elongated** Vitreous china, close coupled, low water consumption, boxed rim, washdown, S trap, floor mounted two-piece toilet.

These dimensions and specifications are subject to change without notice.

Fixture dimensions meet ANSI/ASME standard A 112.19.2M and CAN/CSA B45 requirements.

See Caroma for suggested packages.

Product No.

Issue No. 2 Date: 08/23/2005

Reflections 305 Elongated

1.6/0.8 GPF (6/3 l) Water Saving, Dual Flush High Efficiency Toilet (HET),
Two Piece Ultra Low Flush (ULF) Vitreous China Washdown Toilet

Rough-in dimensions for Reflections 305 Elongated

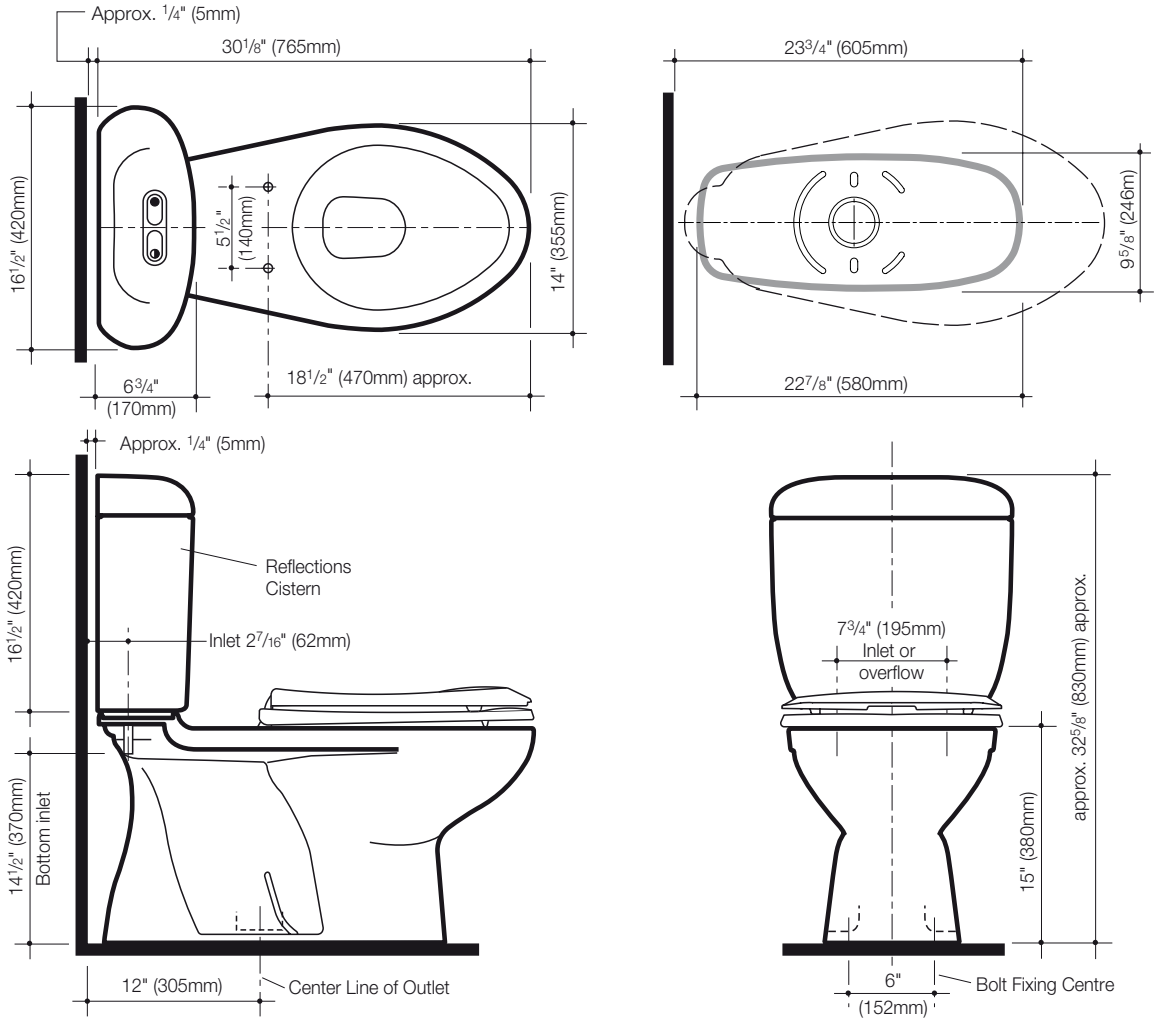

These dimensions and specifications are subject to change without notice.

Fixture dimensions meet ANSI/ASME standard A 112.19.2M and CAN/CSA B45 requirements.

Product No.

Issue No. 2 Date: 08/23/2005